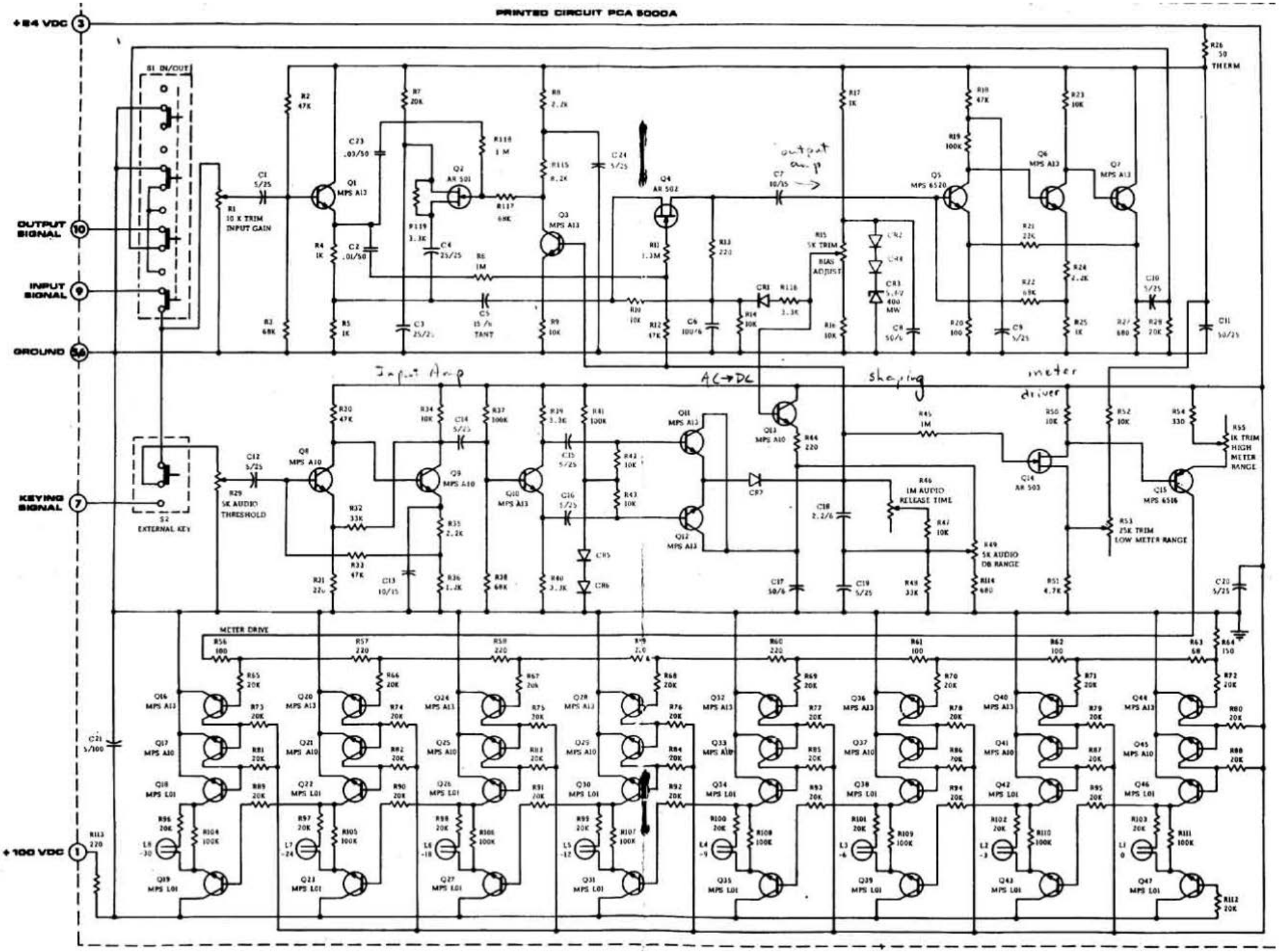PRINTED CIRCUIT PCA 5000A