Data Sheet

jensen transformers
By REICHENBACH ENGINEERING

JE-11SSP-6M
LINE INPUT TRANSFORMER

The JE-11SSP-6M is a 600/150 – 600/150 ohm (split winding) line input transformer for low input impedance circuits. It handles levels to +18dBv. Re: 0.775v @ 20Hz. Below saturation, the 20Hz THD is less than 0.035%. The high grade Nickel alloy core yields very low distortion even with source impedances up to several hundred ohms. The bandwidth is 160kHz with <3.5% overshoot.

The standard package has wire leads. An 11 pin octal-type plug version is available. A terminal package is also available, and includes four threaded inserts in each end for mounting. The same design is also available with a lower permeability Nickel core by omitting the suffix "M". This material yields 6dB more maximum level, but must be used with source impedances of 100 ohms or less to maintain low distortion at low levels.

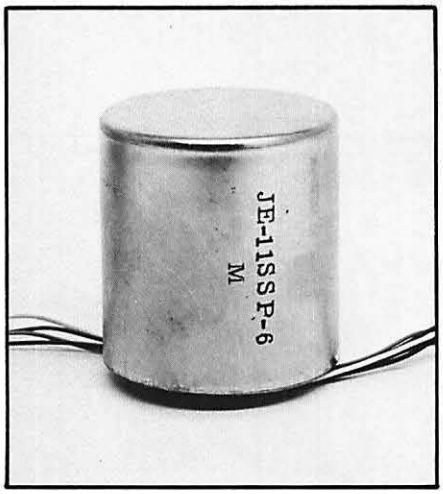

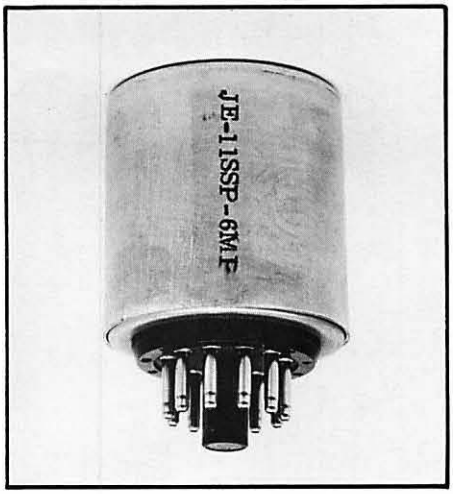

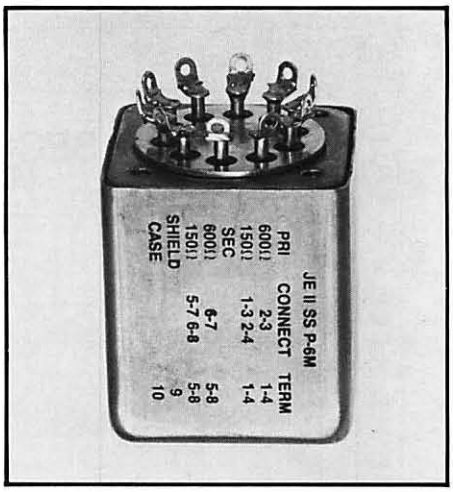

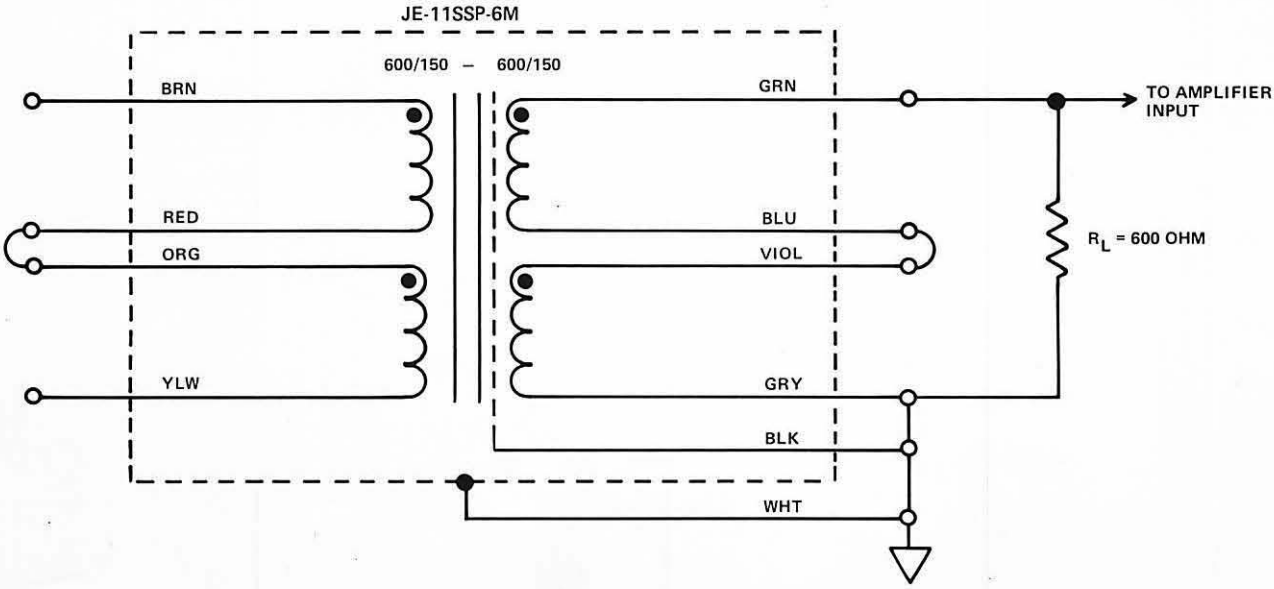

REGARDING THE OSCILLOSCOPE PHOTOS

Actual oscilloscope photos were made with a Tektronix Model 453A (certified calibration).

2kHz Square Wave

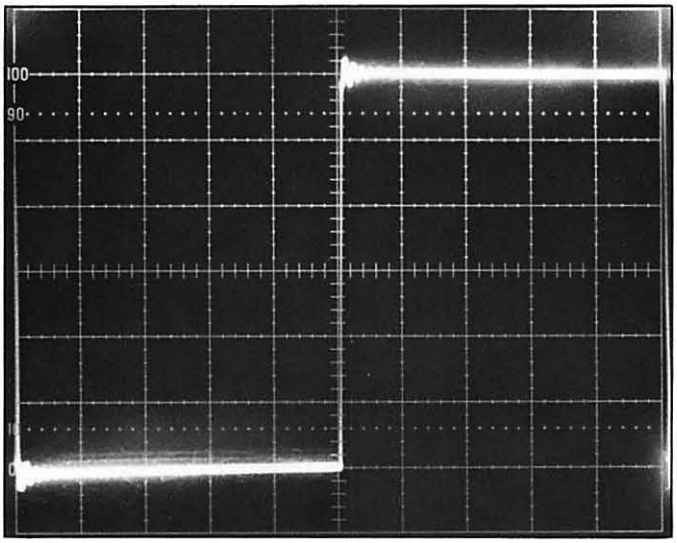

50μS/division

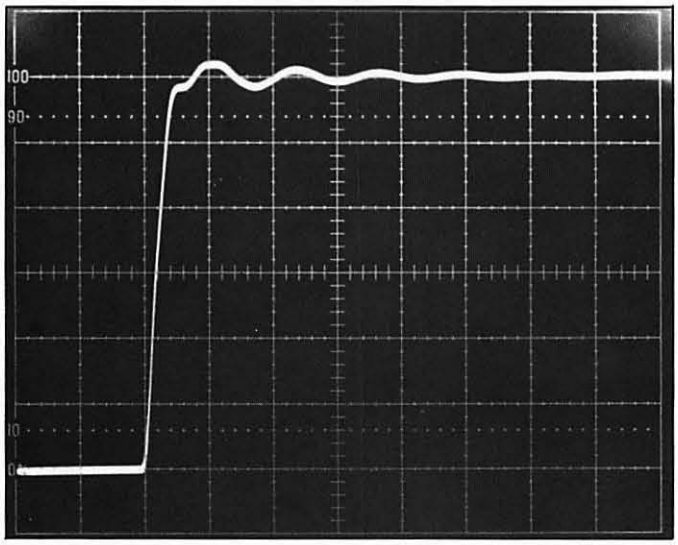

5μS/division

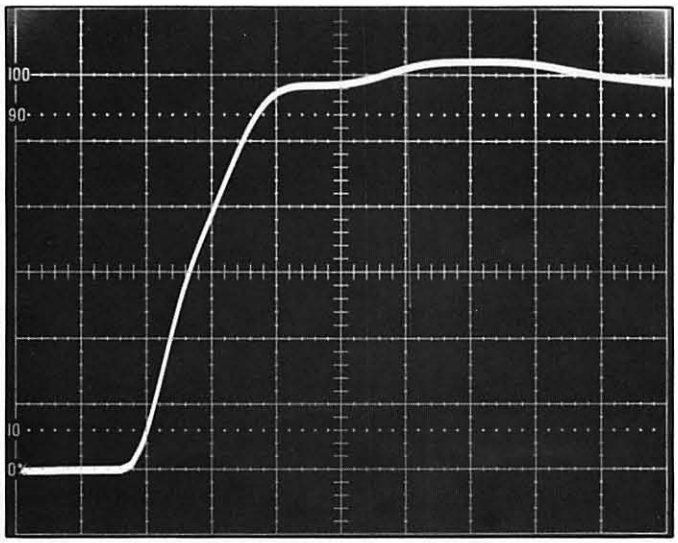

1μS/division

All curves were generated by a Hewlett-Packard 9815A/9862A programmable calculator/plotter.

All calculations were either derived from or verified by actual measurements. The distortion curves were generated by a polynominal curve fit program using measurements by a Sound Technology 1710A analyzer. Verified accuracies are on the order of one pen line width.

DISTORTION

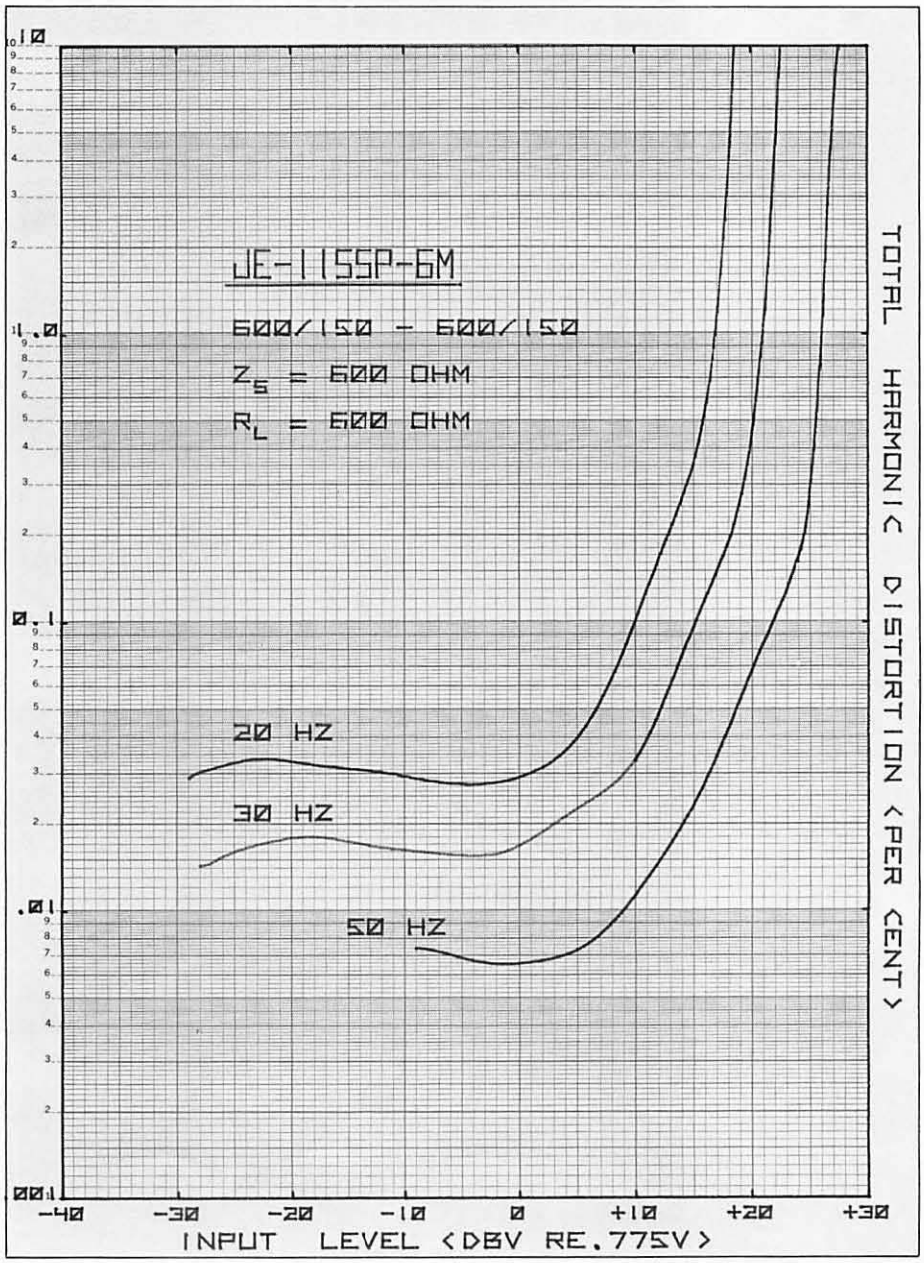

INPUT IMPEDANCE

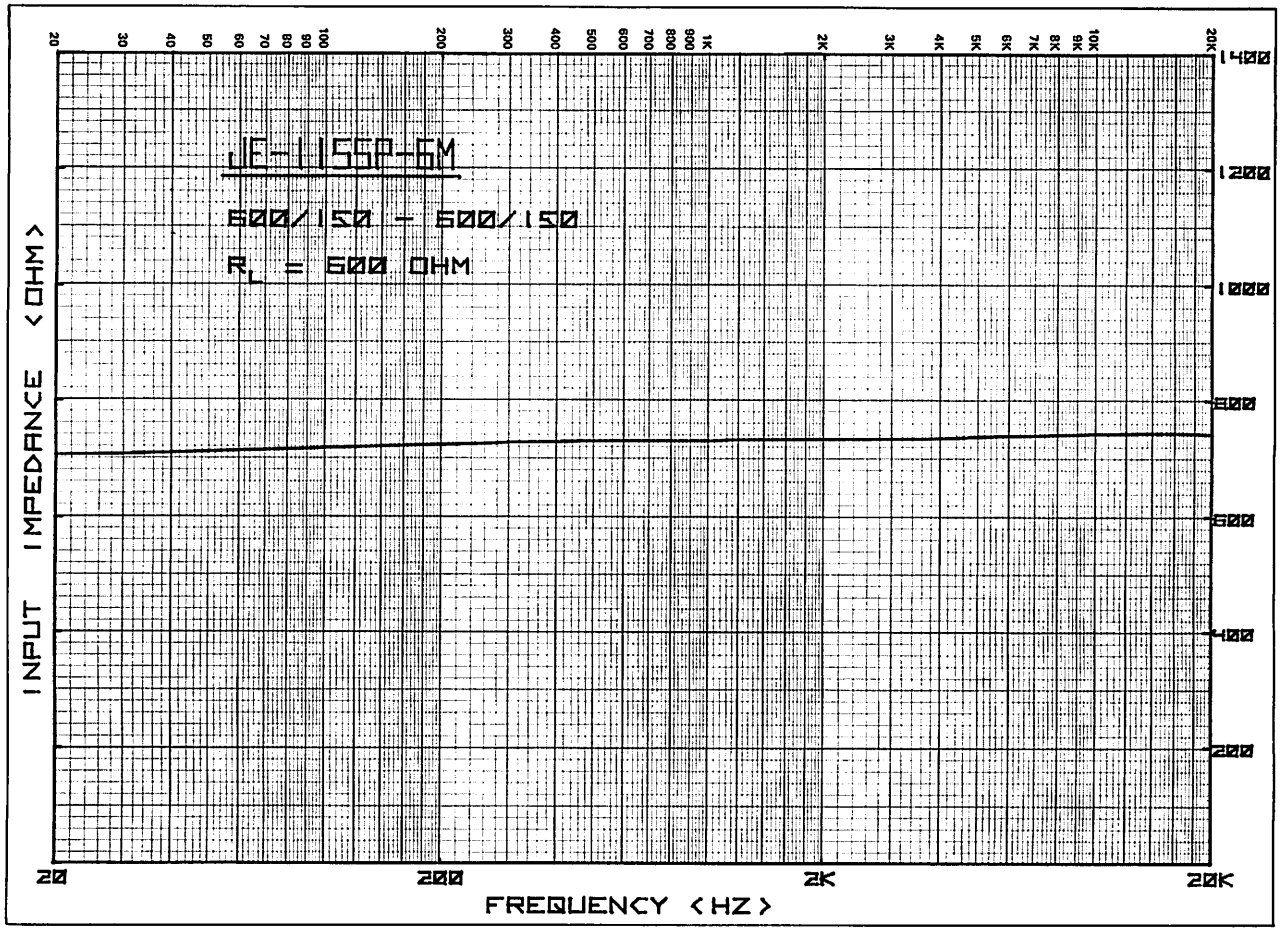

SECONDARY SOURCE IMPEDANCE

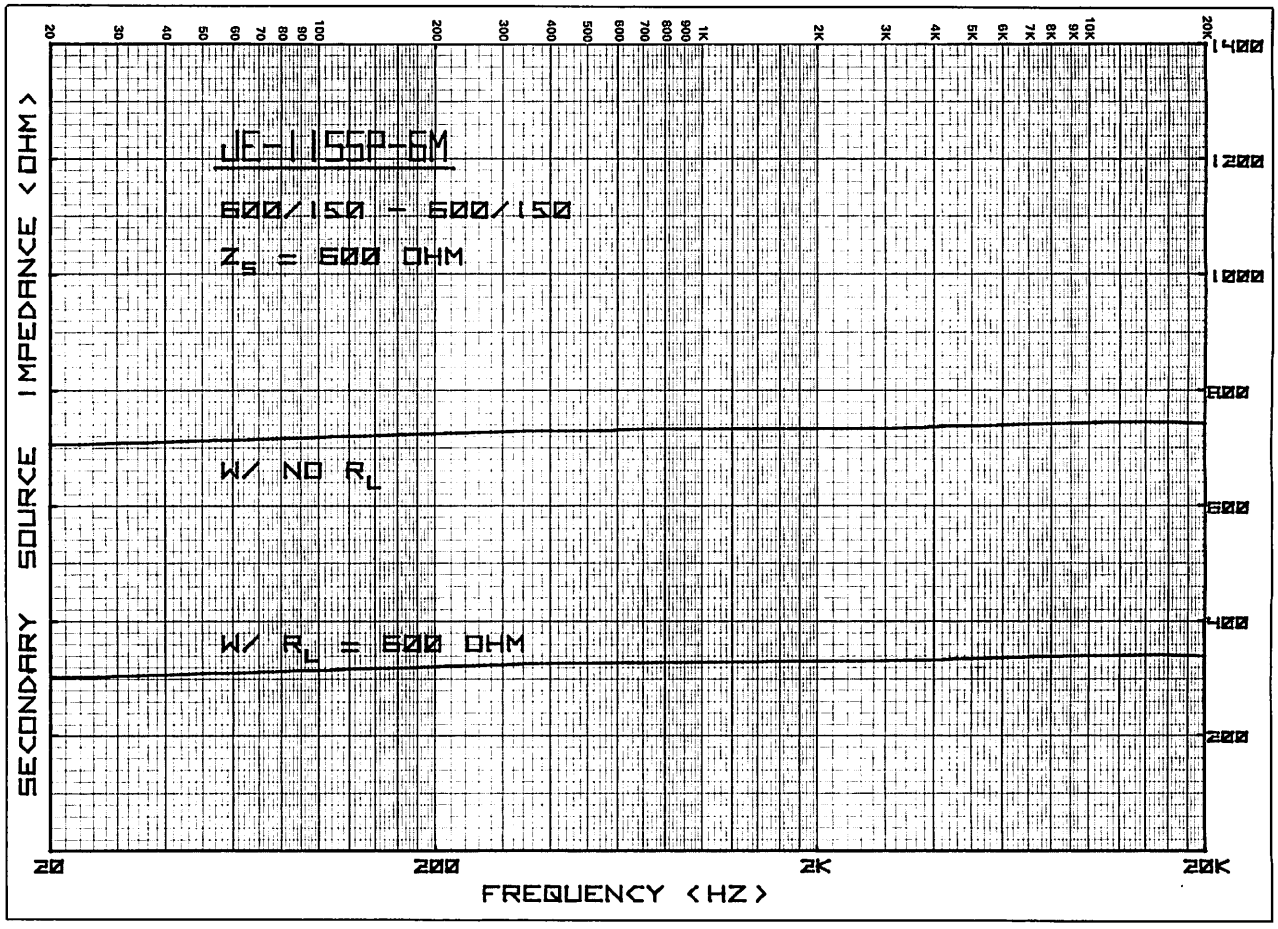

FREQUENCY RESPONSE

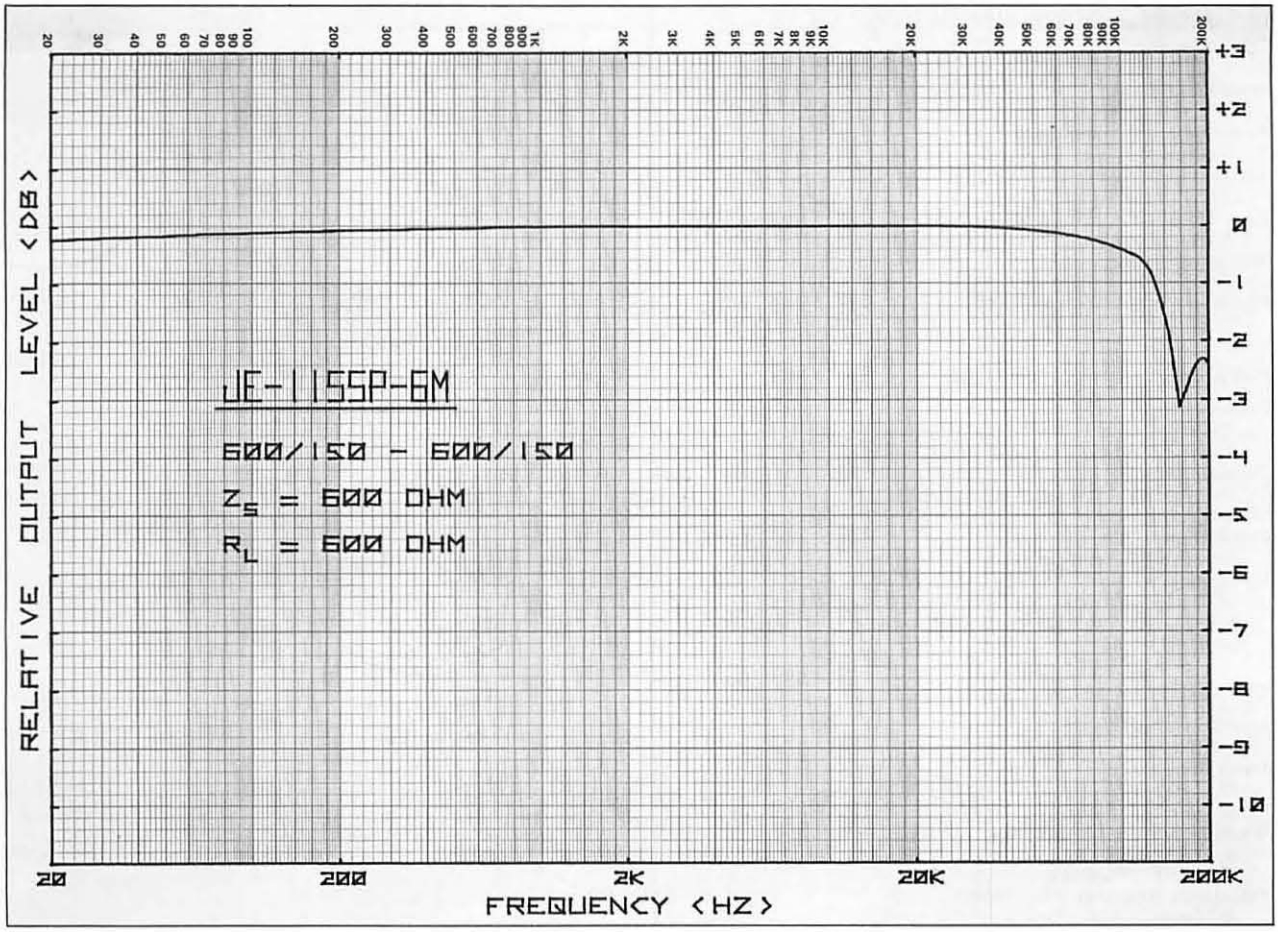

PHASE RESPONSE

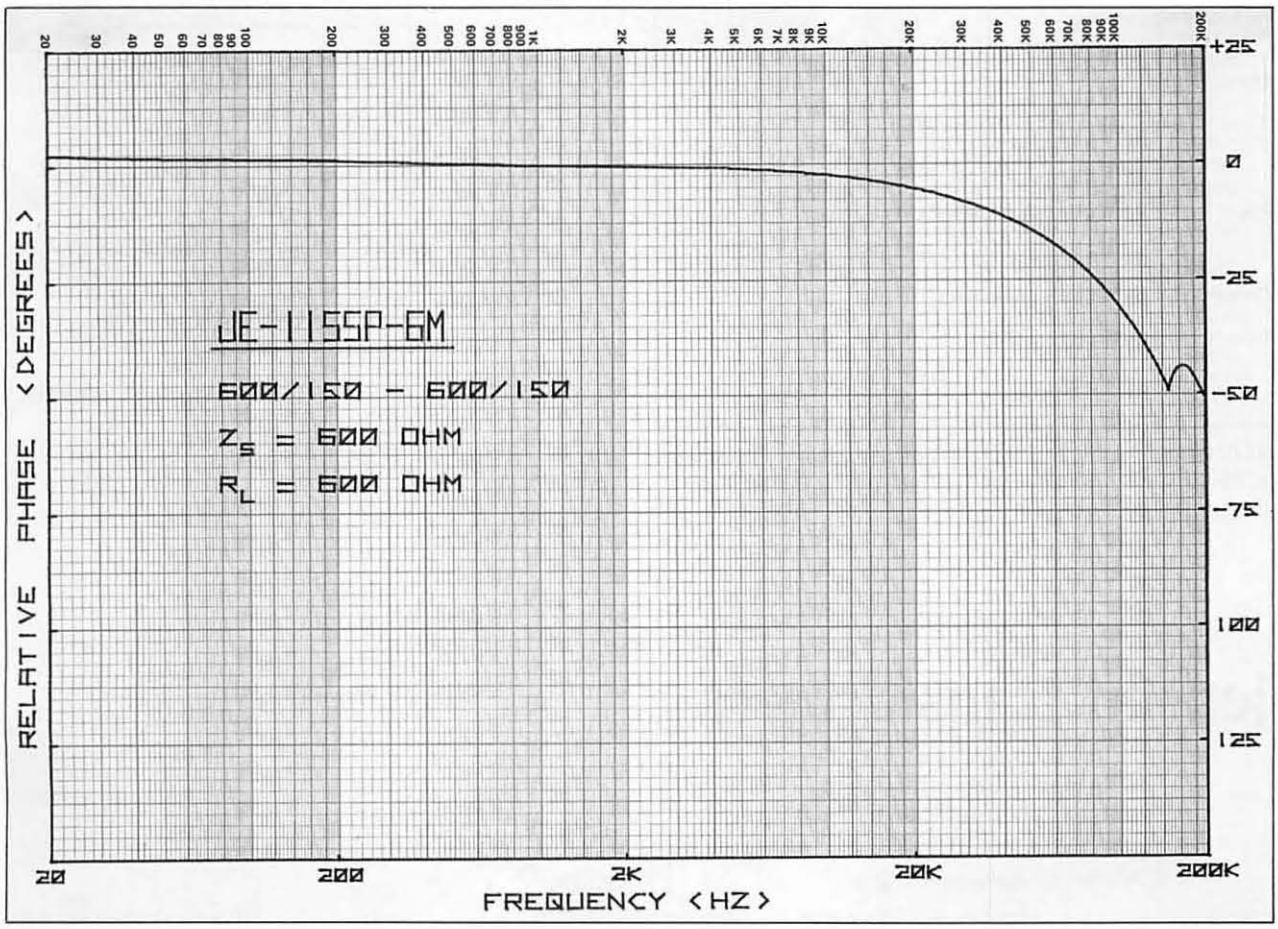

JE-11SSP-6M GENERAL CHARACTERISTICS

Turns Ratio
1:1
Impedance Ratio
600/150 – 600/150
Primary Source Impedance
600 ohms or less
Secondary Load Resistor
600 ohms
Faraday Shield
Separate Lead
Magnetic Shield
30dB, separate case lead
Maximum Input Level at 20Hz
+18dBv (Re: 0.775v)

PHYSICAL CHARACTERISTICS

Package
Mu-metal cans; round for wire lead and octal versions, rectangular for terminal version.
Termination
Wire leads, 11 pin octal type plug, or 10 solder terminals.
Dimensions
Refer to adjacent dimensional drawings.
Mounting
Capacitor clamp supplied for wire lead version; four #4-40 inserts on top and bottom of terminal version.

TYPICAL PERFORMANCE

Insertion Loss
–1.0dB
Input Impedance
@ 1kHz 734 ohms
@ 10kHz 745 ohms
Secondary Source Impedance
@ 1kHz 734 ohms
@ 10kHz 745 ohms
Frequency Response (Re: 1kHz)
@ 20Hz –0.25dB
@ 20kHz 0dB (ref.)
Bandwidth
@ –3dB 160kHz
Phase Response
@ 20kHz –5 deg
Rise Time
(10%-90%) 1.7μS
Overshoot
<3.5%
Total Harmonic Distortion (Below Saturation)
0.035% @ 20Hz
0.018% @ 30Hz
0.008% @ 50Hz
Input Level @ 1% Saturation (dBv Re: 0.775v)
+17dBv @ 20Hz
+21dBv @ 30Hz
+26dBv @ 50Hz
Common-Mode Voltage (maximum)
>200v peak
Common-Mode Rejection Ratio
>90dB @ 1kHz
>70dB @ 10kHz

MECHANICAL DESIGNERS: Dimensions are approximate. Please have a transformer in hand when laying out panel cutouts.

(Wire Lead Package)

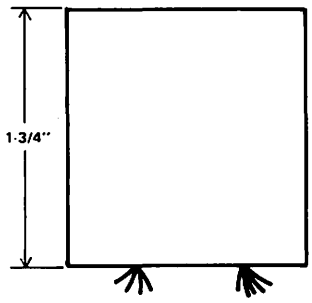

Side View

(Octal Package)

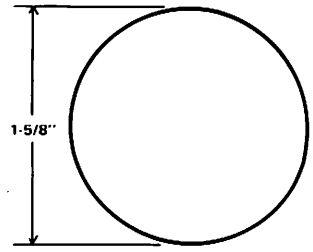

Top View

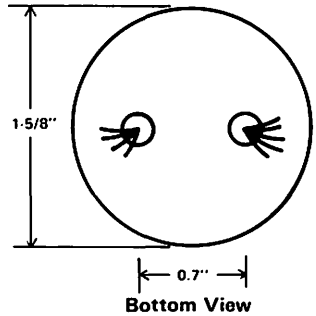

Bottom View

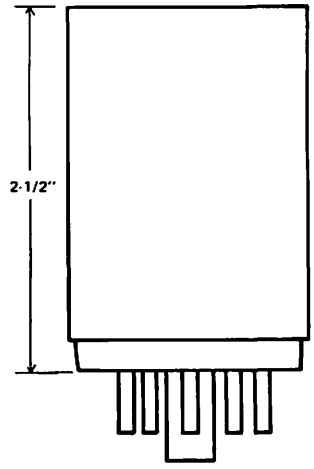

Side View

(Terminal Package)

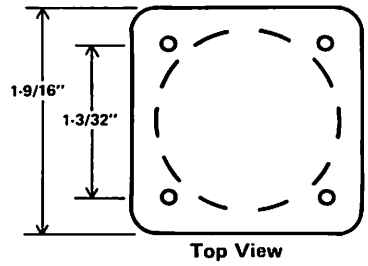

Top View

Mounting Screws: Screw size 4-40. Maximum length 1/4" + panel thickness.

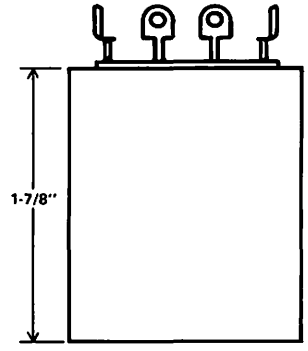

Side View

jensen transformers
By REICHENBACH ENGINEERING

10735 BURBANK BOULEVARD
N. HOLLYWOOD, CALIFORNIA 91601
PHONE (213) 876-0059

(Visitors by Appointment Only)