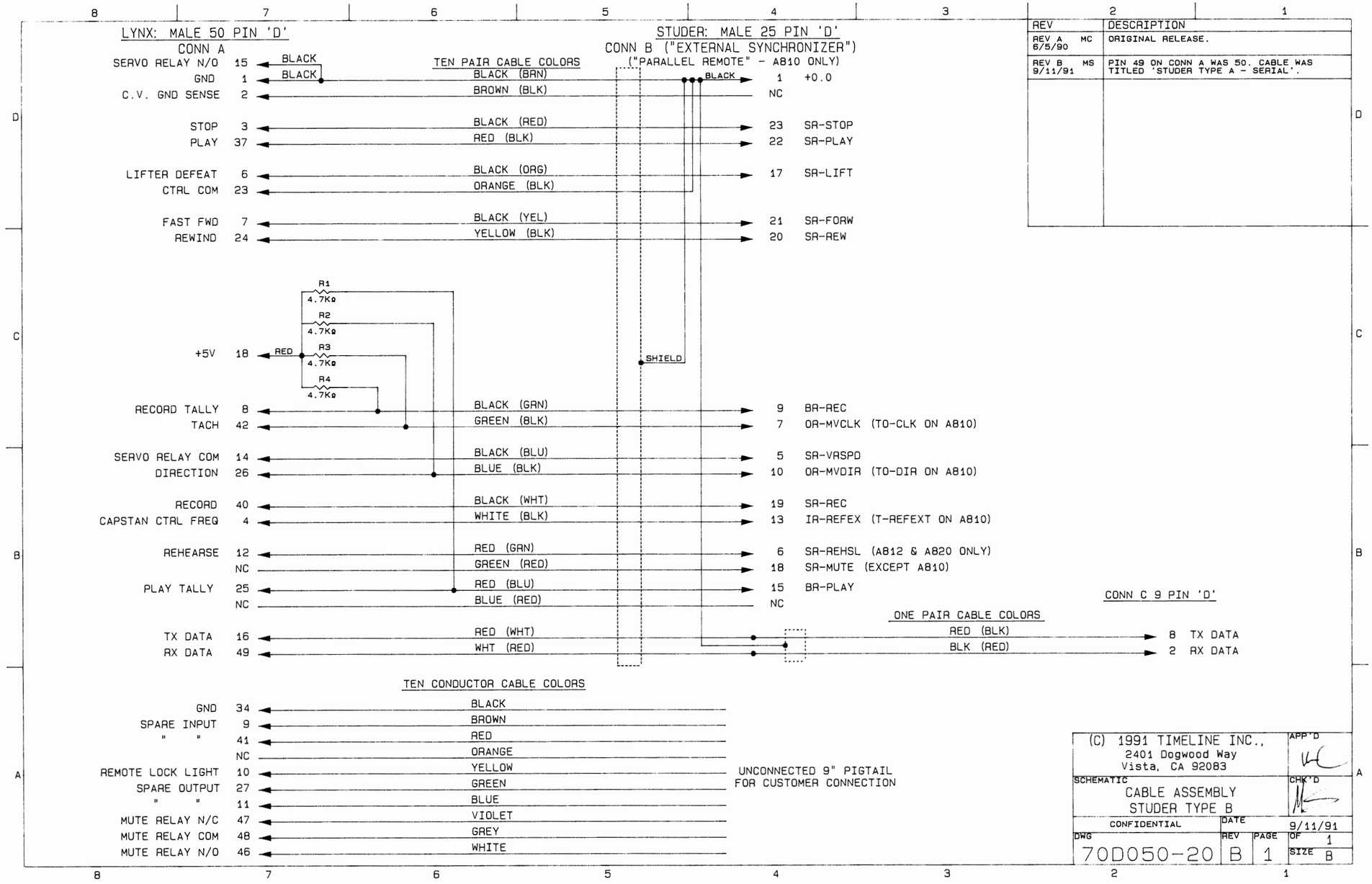

REV	DESCRIPTION
REV A MC 6/5/90	ORIGINAL RELEASE.
REV B MS 9/11/91	PIN 49 ON CONN A WAS 50. CABLE WAS TITLED 'STUDER TYPE A - SERIAL'.

(C) 1991 TIMELINE INC.,
2401 Dogwood Way
Vista, CA 92083

APP'D
SCHEMATIC
CABLE ASSEMBLY
STUDER TYPE B
CHK'D
CONFIDENTIAL
DATE 9/11/91
DWG 70D050-20 REV B PAGE 1 OF 1
SIZE B

70D050-20-1 REV B
STUDER TYPE 'B'

EASI FILE CORP. IRVINE, CA
EFH 24